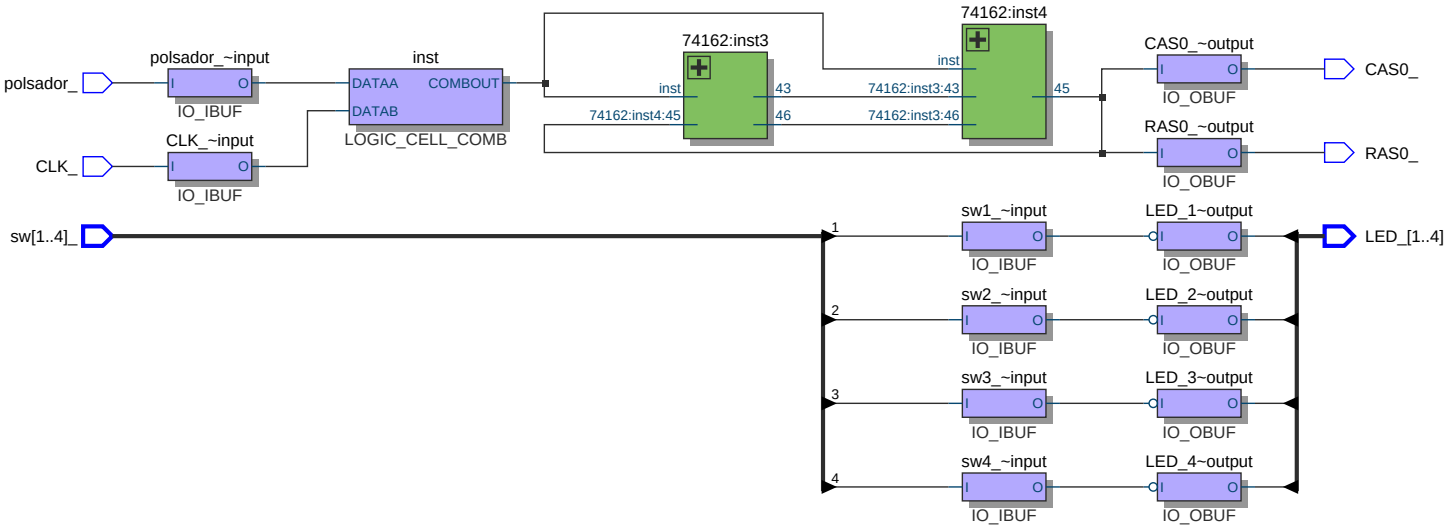
polsador_
polsador_~input
I
O
IO_IBUF
inst
DATAA
COMBOUT
DATAB
LOGIC_CELL_COMB
CLK_
CLK_~input
I
O
IO_IBUF
74162:inst3
inst
43
74162:inst4:45
46
74162:inst4
inst
74162:inst3:43
45
74162:inst3:46
CAS0_~output
I
O
IO_OBUF
CAS0_
RAS0_~output
I
O
IO_OBUF
RAS0_
sw[1..4]_
1
2
3
4
sw1_~input
sw2_~input
sw3_~input
sw4_~input
IO_IBUF
LED_1~output
LED_2~output
LED_3~output
LED_4~output
IO_OBUF
LED_[1..4]