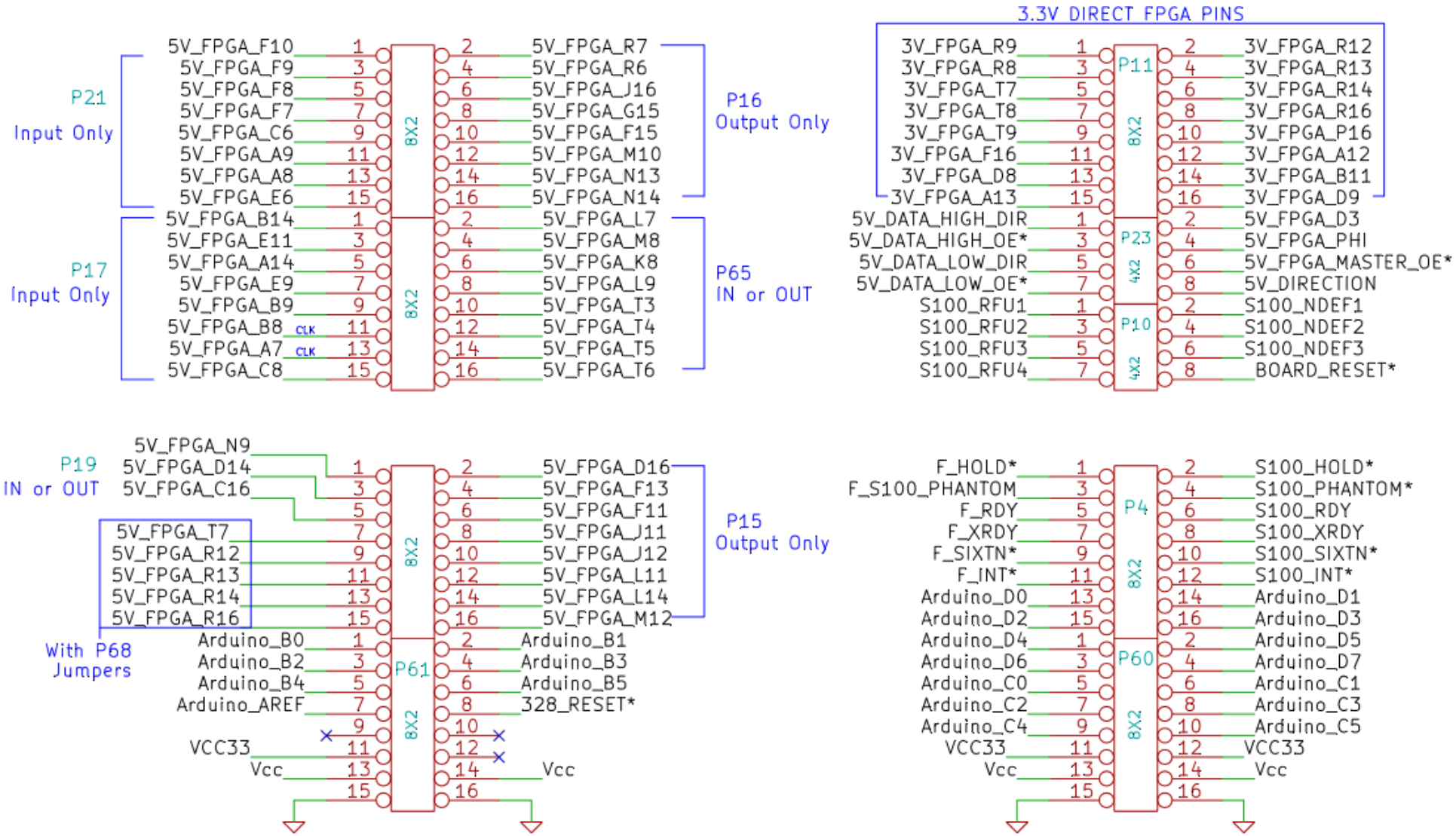
3.3V DIRECT FPGA PINS
P21
Input Only
5V_FPGA_F10 1
5V_FPGA_F9 3
5V_FPGA_F8 5
5V_FPGA_F7 7
5V_FPGA_C6 9
5V_FPGA_A9 11
5V_FPGA_A8 13
5V_FPGA_E6 15
P17
Input Only
5V_FPGA_B14 1
5V_FPGA_E11 3
5V_FPGA_A14 5
5V_FPGA_E9 7
5V_FPGA_B9 9
5V_FPGA_B8 CLK 11
5V_FPGA_A7 CLK 13
5V_FPGA_C8 15
8X2
2 5V_FPGA_R7
4 5V_FPGA_R6
6 5V_FPGA_J16
8 5V_FPGA_G15
10 5V_FPGA_F15
12 5V_FPGA_M10
14 5V_FPGA_N13
16 5V_FPGA_N14
P16
Output Only
2 5V_FPGA_L7
4 5V_FPGA_M8
6 5V_FPGA_K8
8 5V_FPGA_L9
10 5V_FPGA_T3
12 5V_FPGA_T4
14 5V_FPGA_T5
16 5V_FPGA_T6
P65
IN or OUT
P11
3V_FPGA_R9 1
3V_FPGA_R8 3
3V_FPGA_T7 5
3V_FPGA_T8 7
3V_FPGA_T9 9
3V_FPGA_F16 11
3V_FPGA_D8 13
3V_FPGA_A13 15
2 3V_FPGA_R12
4 3V_FPGA_R13
6 3V_FPGA_R14
8 3V_FPGA_R16
10 3V_FPGA_P16
12 3V_FPGA_A12
14 3V_FPGA_B11
16 3V_FPGA_D9
P23
4X2
5V_DATA_HIGH_DIR 1
5V_DATA_HIGH_OE* 3
5V_DATA_LOW_DIR 5
5V_DATA_LOW_OE* 7
2 5V_FPGA_D3
4 5V_FPGA_PHI
6 5V_FPGA_MASTER_OE*
8 5V_DIRECTION
P10
4X2
S100_RFU1 1
S100_RFU2 3
S100_RFU3 5
S100_RFU4 7
2 S100_NDEF1
4 S100_NDEF2
6 S100_NDEF3
8 BOARD_RESET*
P19
IN or OUT
5V_FPGA_N9
5V_FPGA_D14
5V_FPGA_C16
1
3
5
5V_FPGA_T7 7
5V_FPGA_R12 9
5V_FPGA_R13 11
5V_FPGA_R14 13
5V_FPGA_R16 15
With P68
Jumpers
2 5V_FPGA_D16
4 5V_FPGA_F13
6 5V_FPGA_F11
8 5V_FPGA_J11
10 5V_FPGA_J12
12 5V_FPGA_L11
14 5V_FPGA_L14
16 5V_FPGA_M12
P15
Output Only
P61
Arduino_B0 1
Arduino_B2 3
Arduino_B4 5
Arduino_AREF 7
9
VCC33 11
Vcc 13
15
2 Arduino_B1
4 Arduino_B3
6 Arduino_B5
8 328_RESET*
10
12
14 Vcc
16
P4
F_HOLD* 1
F_S100_PHANTOM 3
F_RDY 5
F_XRDY 7
F_SIXTN* 9
F_INT* 11
Arduino_D0 13
Arduino_D2 15
2 S100_HOLD*
4 S100_PHANTOM*
6 S100_RDY
8 S100_XRDY
10 S100_SIXTN*
12 S100_INT*
14 Arduino_D1
16 Arduino_D3
P60
Arduino_D4 1
Arduino_D6 3
Arduino_C0 5
Arduino_C2 7
Arduino_C4 9
VCC33 11
Vcc 13
15
2 Arduino_D5
4 Arduino_D7
6 Arduino_C1
8 Arduino_C3
10 Arduino_C5
12 VCC33
14 Vcc
16