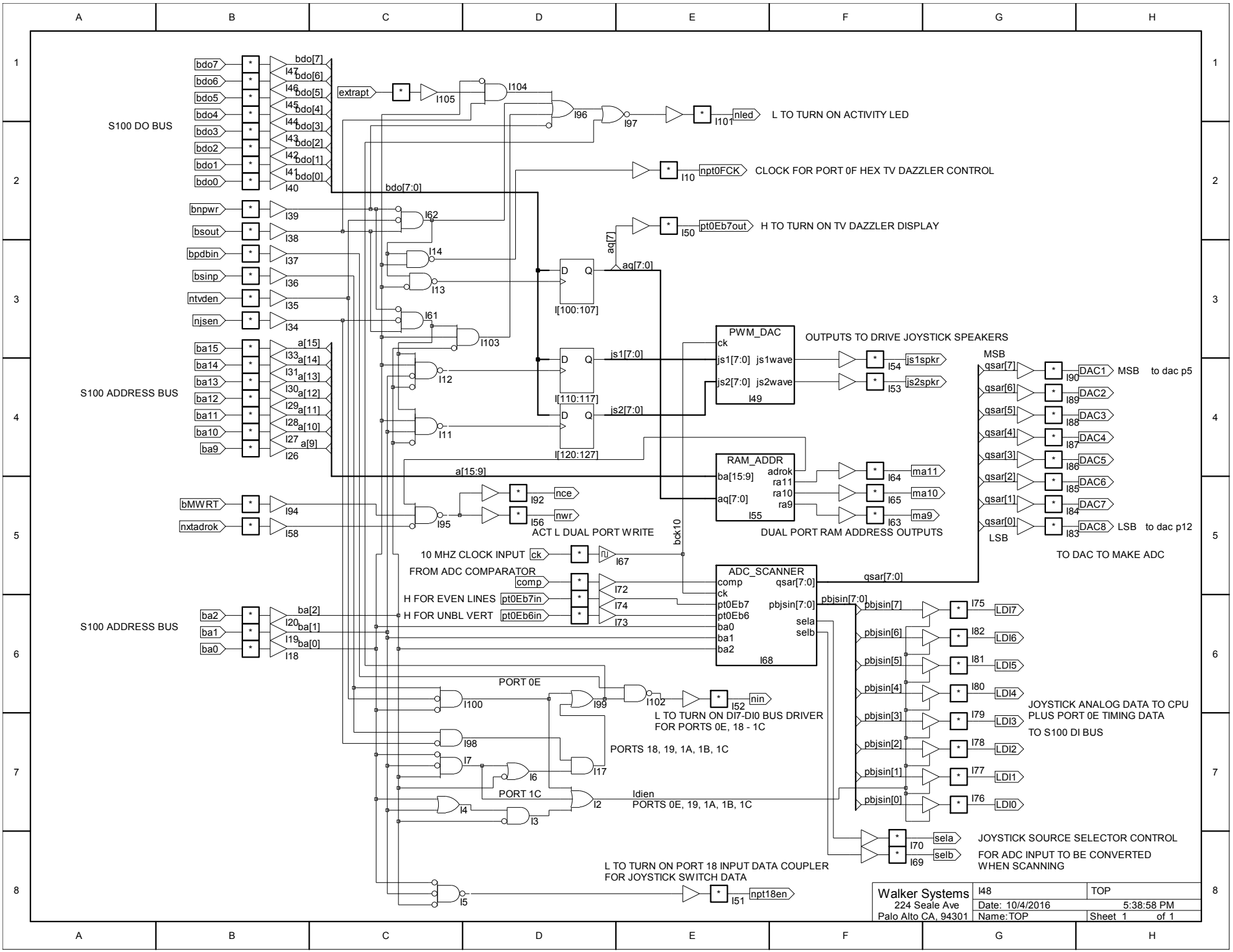
S100 DO BUS
bdo7
bdo6
bdo5
bdo4
bdo3
bdo2
bdo1
bdo0
bdo[7]
bdo[6]
bdo[5]
bdo[4]
bdo[3]
bdo[2]
bdo[1]
bdo[0]
bdo[7:0]
extrapt
I105
I104
I96
I97
I101
nled
L TO TURN ON ACTIVITY LED
I10
npt0FCK
CLOCK FOR PORT 0F HEX TV DAZZLER CONTROL
I50
pt0Eb7out
H TO TURN ON TV DAZZLER DISPLAY
bnpwr
bsout
bpdbin
bsinp
ntvden
njsen
I62
I14
I13
I61
I103
I12
I11
aq[7]
aq[7:0]
I[100:107]
I[110:117]
I[120:127]
js1[7:0]
js2[7:0]
S100 ADDRESS BUS
ba15
ba14
ba13
ba12
ba11
ba10
ba9
a[15]
a[14]
a[13]
a[12]
a[11]
a[10]
a[9]
a[15:9]
PWM_DAC
ck
js1[7:0] js1wave
js2[7:0] js2wave
I49
OUTPUTS TO DRIVE JOYSTICK SPEAKERS
I54
js1spkr
I53
js2spkr
MSB
qsar[7]
qsar[6]
qsar[5]
qsar[4]
qsar[3]
qsar[2]
qsar[1]
qsar[0]
LSB
DAC1
DAC2
DAC3
DAC4
DAC5
DAC6
DAC7
DAC8
MSB to dac p5
LSB to dac p12
TO DAC TO MAKE ADC
RAM_ADDR
ba[15:9]
aq[7:0]
adrok
ra11
ra10
ra9
I55
I64
ma11
I65
ma10
I63
ma9
DUAL PORT RAM ADDRESS OUTPUTS
bMWRT
nxtadrok
I94
I58
I95
I92
nce
I56
nwr
ACT L DUAL PORT WRITE
bck10
10 MHZ CLOCK INPUT
ck
I67
FROM ADC COMPARATOR
comp
H FOR EVEN LINES
pt0Eb7in
H FOR UNBL VERT
pt0Eb6in
I72
I74
I73
ADC_SCANNER
comp
ck
pt0Eb7
pt0Eb6
ba0
ba1
ba2
qsar[7:0]
pbjsin[7:0]
sela
selb
I68
qsar[7:0]
pbjsin[7:0]
S100 ADDRESS BUS
ba2
ba1
ba0
ba[2]
ba[1]
ba[0]
I20
I19
I18
PORT 0E
I100
I99
I102
I52
nin
L TO TURN ON DI7-DI0 BUS DRIVER
FOR PORTS 0E, 18 - 1C
I98
I7
I6
I17
PORTS 18, 19, 1A, 1B, 1C
PORT 1C
I4
I3
I2
Idien
PORTS 0E, 19, 1A, 1B, 1C
pbjsin[7]
pbjsin[6]
pbjsin[5]
pbjsin[4]
pbjsin[3]
pbjsin[2]
pbjsin[1]
pbjsin[0]
I75
I82
I81
I80
I79
I78
I77
I76
LDI7
LDI6
LDI5
LDI4
LDI3
LDI2
LDI1
LDI0
JOYSTICK ANALOG DATA TO CPU
PLUS PORT 0E TIMING DATA
TO S100 DI BUS
I70
sela
I69
selb
JOYSTICK SOURCE SELECTOR CONTROL
FOR ADC INPUT TO BE CONVERTED
WHEN SCANNING
L TO TURN ON PORT 18 INPUT DATA COUPLER
FOR JOYSTICK SWITCH DATA
I5
I51
npt18en
Walker Systems
224 Seale Ave
Palo Alto CA, 94301
I48
TOP
Date: 10/4/2016
5:38:58 PM
Name:TOP
Sheet 1 of 1