8080 REPLACEMENT BOARD REV 2
FOR ALTAIR AND IMSAI
S-100 COMPUTERS. 8080A CPU,
64K RAM, 32K ROM, I/O, UARTS
SPI & SD CARD FLOPPY EMULATION
SEP 24, 2018
DESIGNER: JOSH BENSADON

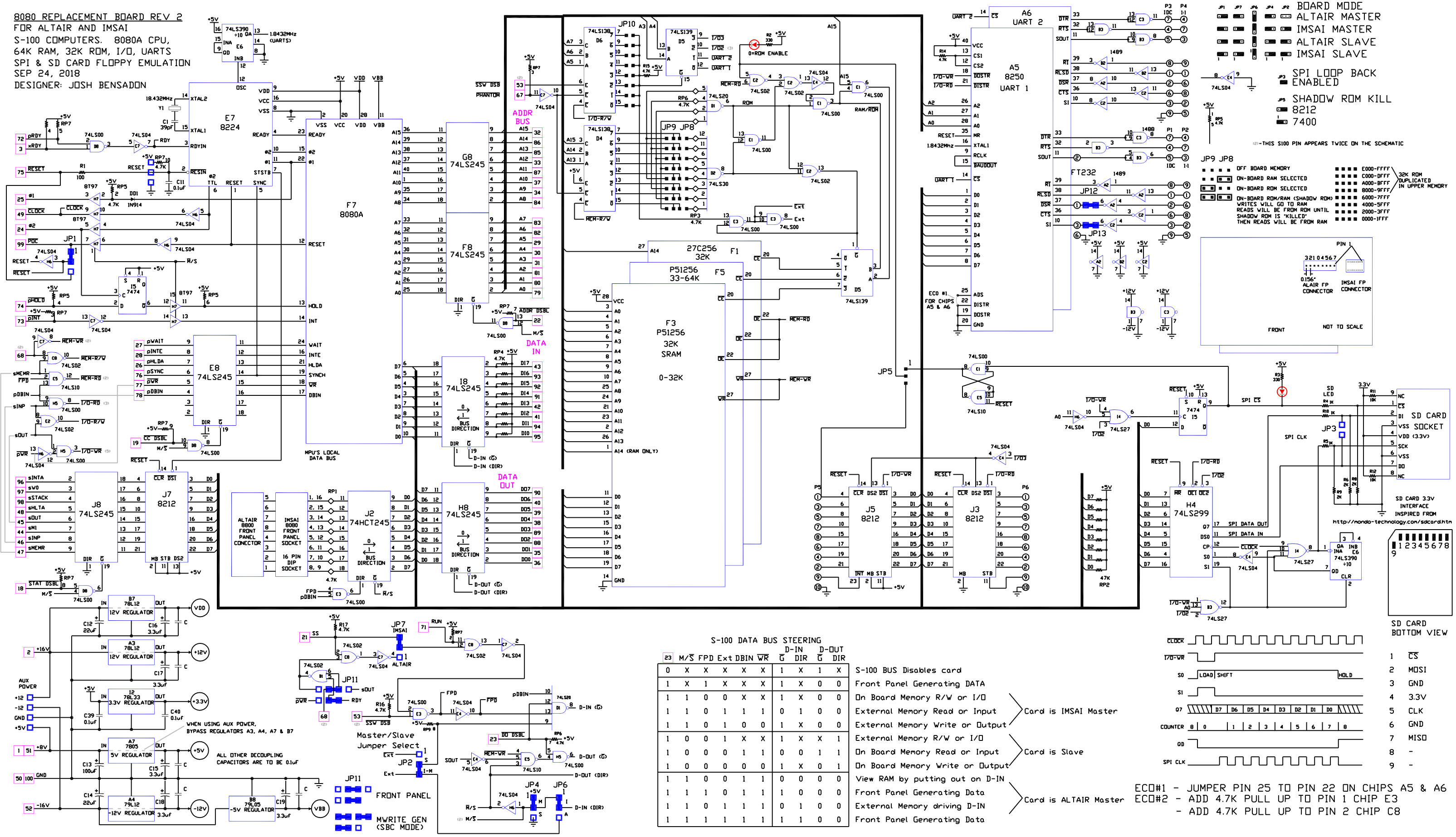

S-100 DATA BUS STEERING

23	M/S	FPD	Ext	DBIN	WR	D-IN G	D-IN DIR	D-OUT G	D-OUT DIR		
0	X	X	X	X	X	1	X	1	X	S-100 BUS Disables card	
1	X	1	X	X	X	1	X	0	0	Front Panel Generating DATA	
1	1	0	0	X	X	1	X	0	0	On Board Memory R/W or I/O	Card is IMSAI Master
1	1	0	1	1	1	0	1	0	0	External Memory Read or Input	Card is IMSAI Master
1	1	0	1	0	0	1	X	0	0	External Memory Write or Output	Card is IMSAI Master
1	0	0	1	X	X	1	X	X	1	External Memory R/W or I/O	Card is Slave
1	0	0	0	1	1	0	0	1	1	On Board Memory Read or Input	Card is Slave
1	0	0	0	0	0	1	X	0	1	On Board Memory Write or Output	Card is Slave
1	1	0	0	1	1	0	0	0	0	View RAM by putting out on D-IN	Card is ALTAIR Master
1	1	1	0	1	1	1	0	0	0	Front Panel Generating Data	Card is ALTAIR Master
1	1	0	1	1	1	0	1	0	0	External Memory driving D-IN	Card is ALTAIR Master
1	1	1	1	1	1	1	1	0	0	Front Panel Generating Data	Card is ALTAIR Master

ECO#1 - JUMPER PIN 25 TO PIN 22 ON CHIPS A5 & A6
ECO#2 - ADD 4.7K PULL UP TO PIN 1 CHIP E3
- ADD 4.7K PULL UP TO PIN 2 CHIP C8