8080 REPLACEMENT BOARD REV 1
FOR ALTAIR AND IMSAI
S-100 COMPUTERS. 8080A CPU,
64K RAM, 32K ROM, I/O, UARTS
SPI & SD CARD FLOPPY EMULATION
JUNE 25, 2016
DESIGNER: JOSH BENSADON

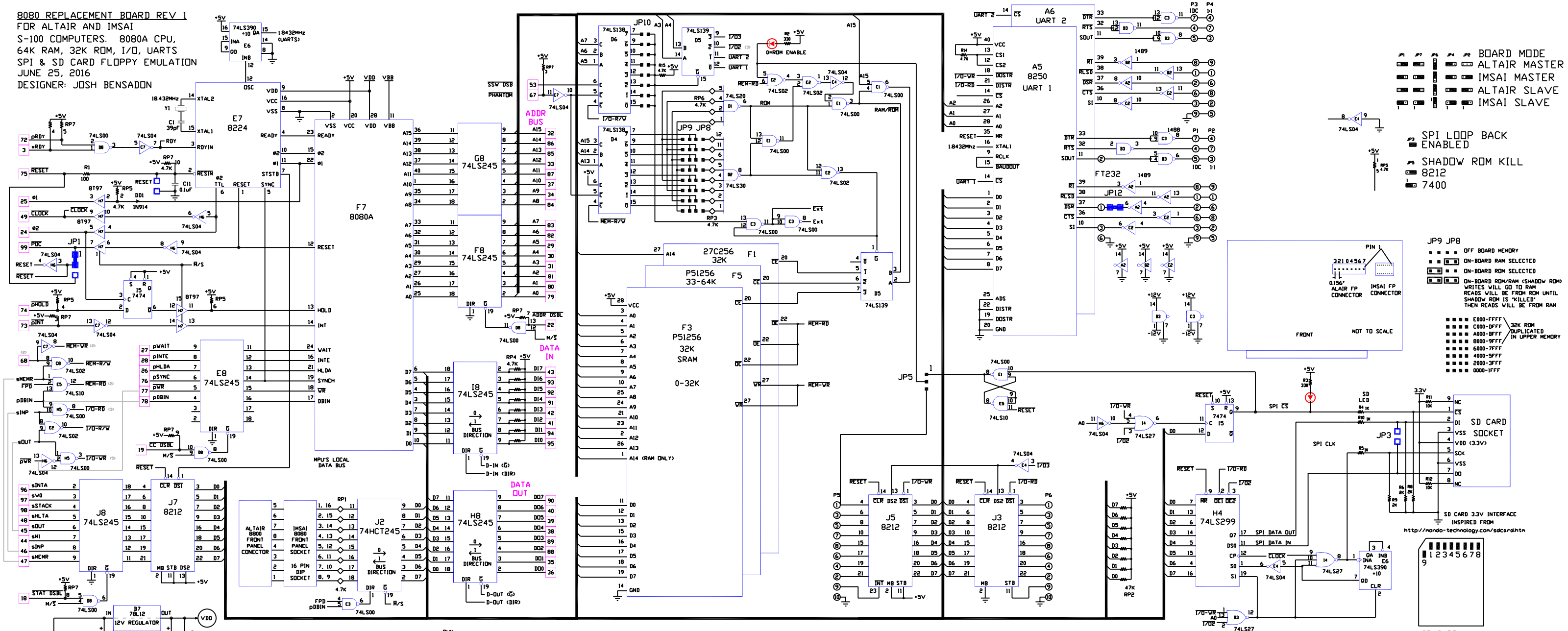

S-100 DATA BUS STEERING

23 M/S	FPD	Ext	DBIN	WR		D-IN G	D-IN DIR	D-OUT G	D-OUT DIR	
0	X	X	X	X	X	1	X	1	X	S-100 BUS Disables card
1	X	1	X	X	X	1	X	0	0	Front Panel Generating DATA
1	1	0	0	X	X	1	X	0	0	On Board Memory R/W or I/O — Card is IMSAI Master
1	1	0	1	1	1	0	1	0	0	External Memory Read or Input — Card is IMSAI Master
1	1	0	1	0	0	1	X	0	0	External Memory Write or Output — Card is IMSAI Master
1	0	0	1	X	X	1	X	X	1	External Memory R/W or I/O — Card is Slave
1	0	0	0	1	1	0	0	1	1	On Board Memory Read or Input — Card is Slave
1	0	0	0	0	0	1	X	0	1	On Board Memory Write or Output — Card is Slave
1	1	0	0	1	1	0	0	0	0	View RAM by putting out on D-IN — Card is ALTAIR Master
1	1	1	0	1	1	1	0	0	0	Front Panel Generating Data — Card is ALTAIR Master
1	1	0	1	1	1	0	1	0	0	External Memory driving D-IN — Card is ALTAIR Master
1	1	1	1	1	1	1	1	0	0	Front Panel Generating Data — Card is ALTAIR Master